THIS DOCUMENT IS TRUE AND CORRECT AT TIME OF PUBLICATION. CONTINUED PRODUCT IMPROVEMENTS MAKE SPECIFICATIONS AND MEASUREMENTS SUBJECT TO CHANGE WITHOUT NOTICE.

NOTES:

1. DIMENSIONS MAY VARY BY ± 1/2 INCH [13mm].

2. TO COMPLY WITH ANSI Z358.1-2009 FOR EMERGENCY EYEWASH OR EYE/FACE WASH AND SHOWER EQUIPMENT:
   - UNIT SHALL BE INSTALLED IN ACCORDANCE WITH MANUFACTURER'S INSTRUCTIONS AND ACCEPTABLE PLUMBING PRACTICES.
   - EYEWASH OR EYE/FACE WASH SHALL BE POSITIONED WITH NOZZLES NOT LESS THEN 83.8 CM (33 IN.) AND NO GREATER THAN 114.3 CM (45 IN.) FROM SURFACE ON WHICH USER STANDS AND 15.3 CM (6 IN.) MINIMUM FROM WALL OR NEAREST OBSTRUCTION.
   - SHOWER SHALL BE POSITIONED SO THAT SHOWER HEAD IS NOT LESS THAN 208.3 CM (82 IN.) NOR MORE THAN 243.8 CM (96 IN.) FROM SURFACE ON WHICH USER STANDS.
   - SHOWER SPRAY PATTERN SHALL HAVE A MINIMUM DIAMETER OF 50.8 CM (20 IN.) AT 152.4 CM (60 IN.) ABOVE SURFACE ON WHICH USER STANDS, AND CENTER OF SPRAY PATTERN SHALL BE LOCATED AT LEAST 40.6 CM (16 IN.) FROM ANY OBSTRUCTION.

3. FLOW RATE FOR EYE/FACE WASH IS 3.7 GPM AND 1.32 GPM FOR EYEWASH CONVERSION. BOTH EXCEED ANSI Z358.1-2009 STANDARD.

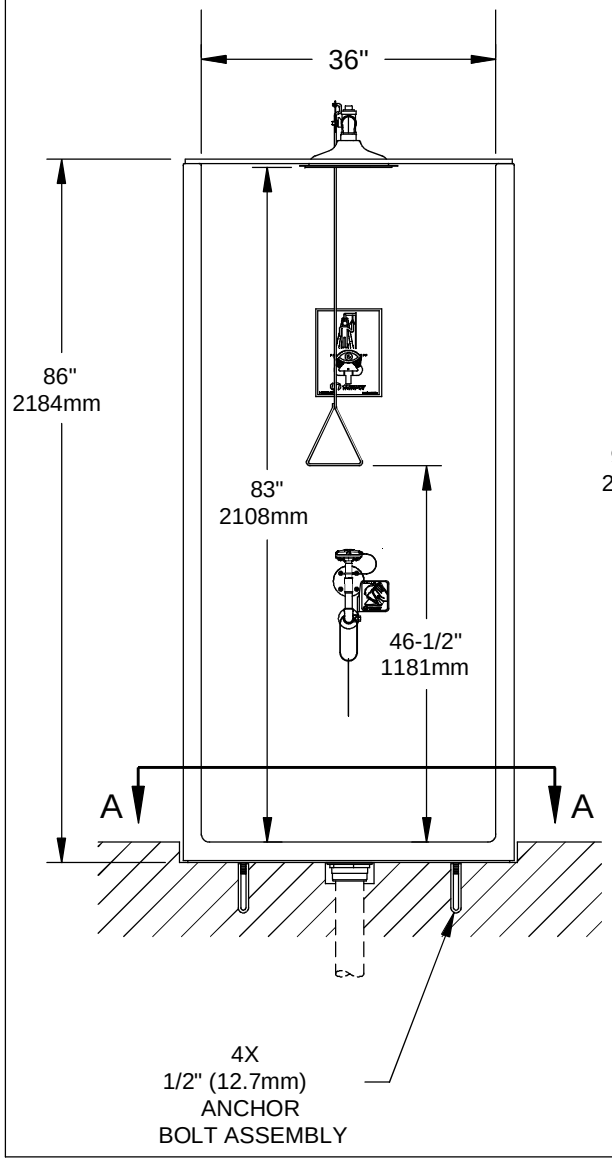

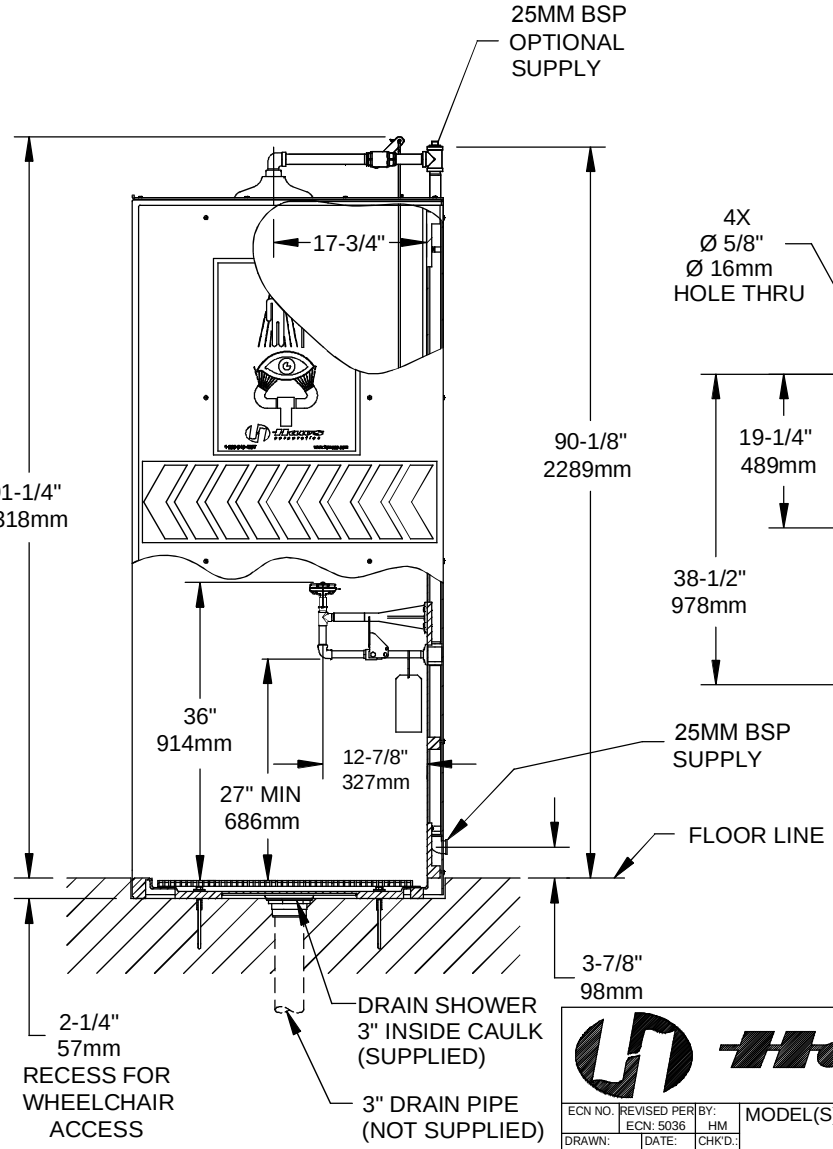

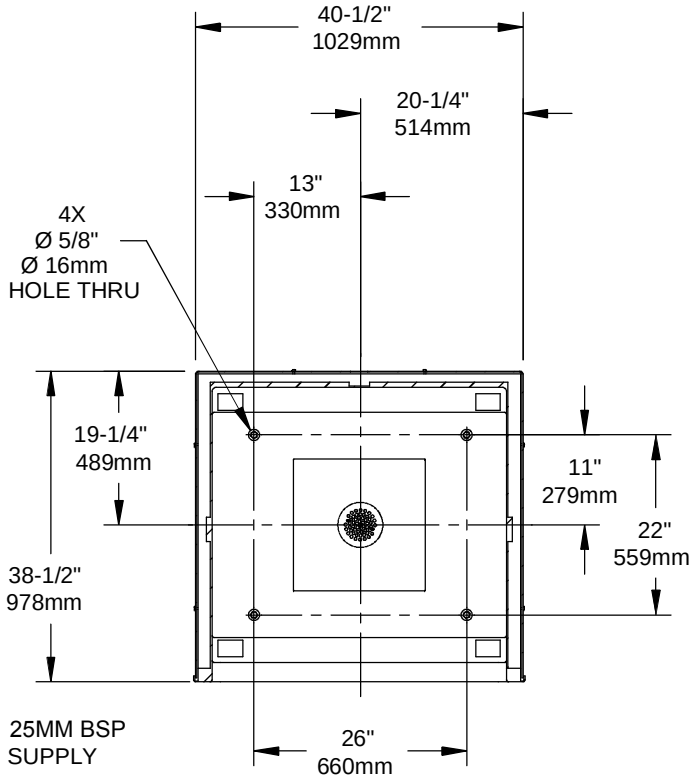

SECTION A-A
MOUNTING DETAIL

Haws®
1455 KLEPPE LANE
SPARKS, NEVADA 89431
(775) 359-4712 FAX (775) 359-7424
E-MAIL: HAWS@HAWSCO.COM
WEBSITE: WWW.HAWSCO.COM

ECN NO.	REVISED PER ECN: 5036	BY: HM	MODEL(S) 8605WC EMERGENCY SHOWER	PART NUMBER 0002080194.D
DRAWN: RTM	DATE: 8/10/01	CHK'D.: RVH		REVISION 11
APPROVED: FV	DATE: 12/31/15		SCALE: 1:1 / DRAWING TYPE: INSTALLATION / SIZE: A	SHEET 1 OF 1

©2015 Haws Corporation - All Rights Reserved. HAWS® and other trademarks used in these materials are the exclusive property of Haws Corporation.